DC

HIGH PERFORMANCE
F8025-H series

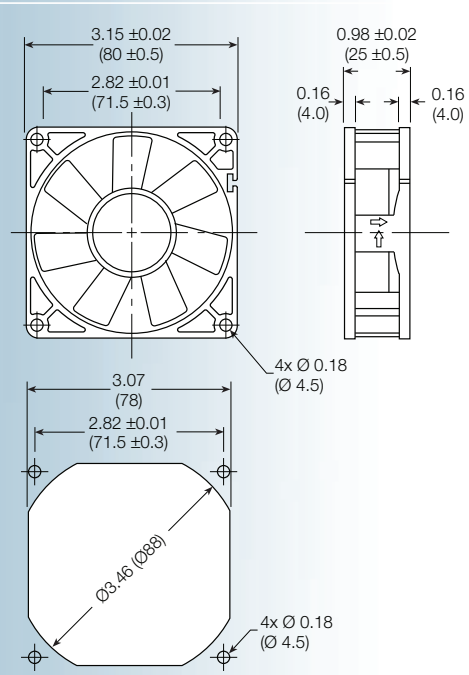

Size: (80 x 80 x 25 mm)
3.15 x 3.15 x 0.98 inches

Features: ***high pressure impeller design***
Construction: UL94V-0 PBT impeller & frame
Bearing option: ball bearing or sleeve
Connection: AWG 24, UL1007 lead wires
Frame: flanged or ribbed
Protection: thermal
Options: tachometer output signal; locked rotor alarm signal; thermistor speed control

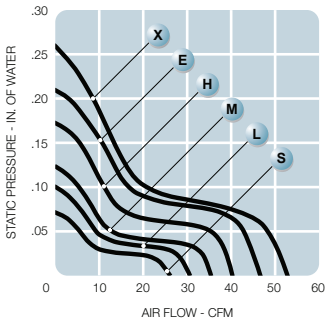

Model No.	Rated Voltage	Current mA		Revolution	Air Volume		Max Static Pressure (H_2O)		Sound Noise	Weight
	V	12	24	RPM	M³/Min	CFM	MM	INCH	dBA	g
F8025S-H	12/24	75	50	2,000	0.73	26	1.75	0.07	22	2.79
F8025L-H	12/24	90	60	2,400	0.87	31	2.50	0.10	26	2.79
F8025M-H	12/24	120	80	2,800	0.99	35	3.00	0.12	29	2.79
F8025H-H	12/24	145	90	3,200	1.13	40	4.25	0.17	32	2.79
F8025E-H	12/24	240	140	3,600	1.30	46	5.25	0.21	35	2.79
F8025X-H	12/24	480	260	4,200	1.50	53	6.50	0.26	39	2.79